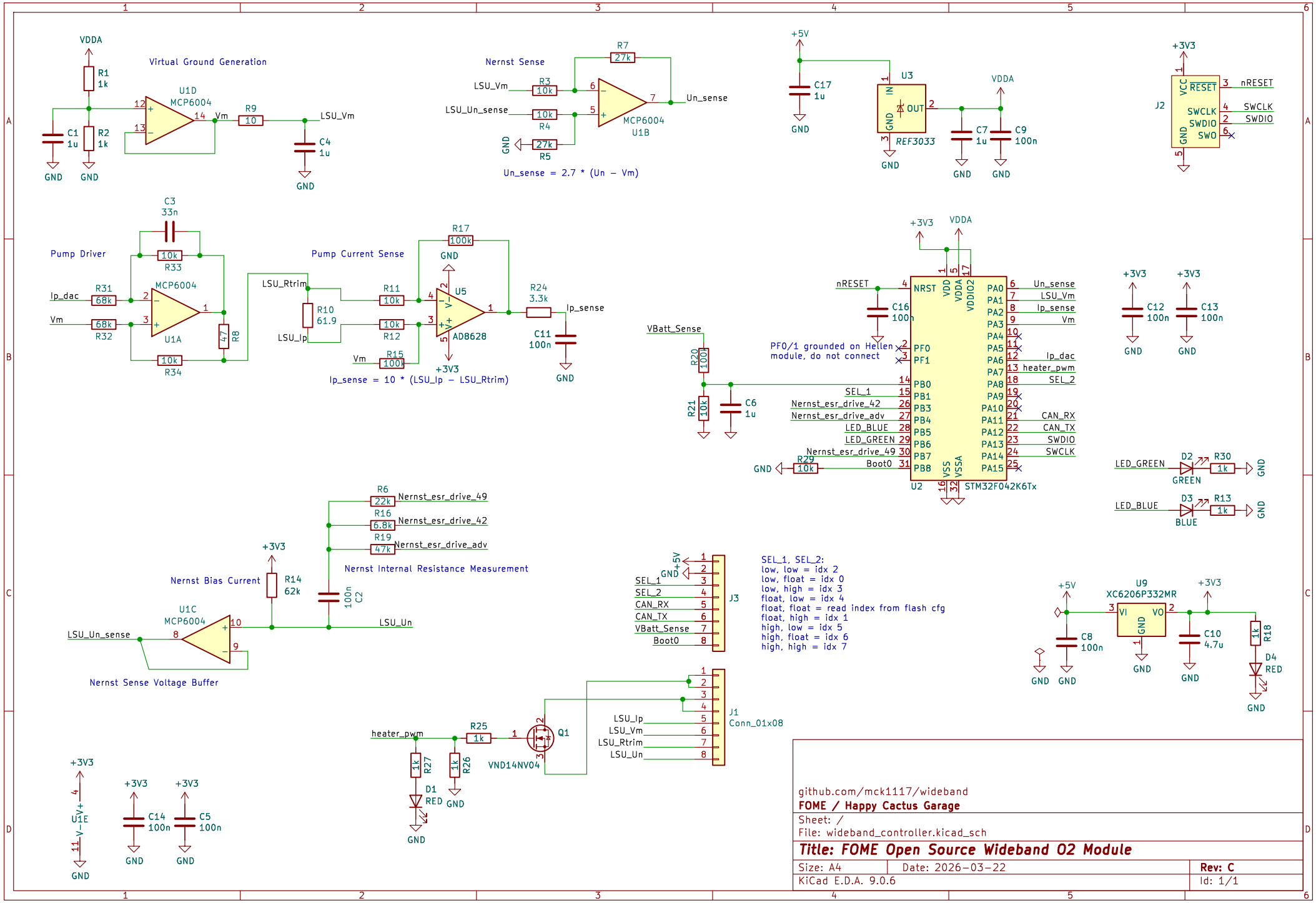

github.com/mck1117/wideband

FOME / Happy Cactus Garage

Sheet: /

File: wideband_controller.kicad_sch

Title: FOME Open Source Wideband O2 Module

Size: A4	Date: 2026-03-22	Rev: C
KiCad E.D.A. 9.0.6		Id: 1/1